Sustav za evaluaciju odziva boje digitalne kamere

Vnučec, Ivan

Undergraduate thesis / Završni rad

2020

Degree Grantor / Ustanova koja je dodijelila akademski / stručni stupanj: **University of Zagreb, Faculty of Electrical Engineering and Computing / Sveučilište u Zagrebu, Fakultet elektrotehnike i računarstva**

Permanent link / Trajna poveznica: https://urn.nsk.hr/urn:nbn:hr:168:191151

Rights / Prava: In copyright / Zaštićeno autorskim pravom.

Download date / Datum preuzimanja: **2024-04-19**

Repository / Repozitorij:

FER Repository - University of Zagreb Faculty of Electrical Engineering and Computing repozitory

SVEUČILIŠTE U ZAGREBU
FAKULTET ELEKTROTEHNIKE I RAČUNARSTVA

ZAVRŠNI RAD br. 6646

SUSTAV ZA EVALUACIJU ODZIVA BOJE DIGITALNE KAMERE

Ivan Vnučec

Zagreb, lipanj 2020.

SVEUČILIŠTE U ZAGREBU
FAKULTET ELEKTROTEHNIKE I RAČUNARSTVA

ZAVRŠNI RAD br. 6646

SUSTAV ZA EVALUACIJU ODZIVA BOJE DIGITALNE KAMERE

Ivan Vnučec

Zagreb, lipanj 2020.

SVEUČILIŠTE U ZAGREBU
FAKULTET ELEKTROTEHNIKE I RAČUNARSTVA

Zagreb, 13. ožujka 2020.

ZAVRŠNI ZADATAK br. 6646

Pristupnik:	**Ivan Vnučec (0036507815)**
Studij:	Elektrotehnika i informacijska tehnologija
Modul:	Elektroničko i računalno inženjerstvo
Mentor:	izv. prof. dr. sc. Dubravko Babić

Zadatak: **Sustav za evaluaciju odziva boje digitalne kamere**

Opis zadatka:

Izraditi izvor svjetla sa više svjetlećih dioda i poluvodičkih lasera koji pokrivaju vidljivi te bliski infracrveni i ultraljubičasti dio spektra: od 1000nm (infracrveni spektar) preko vidljivog spektra do 365 nm (bliski ultraljubičasti spektar). Intenzitet svjetla iz svake diode će se kontrolirati preko USB sučelja ili preko BlueTooth sučelja. Demonstrirati korištenje razvijenog uređaja za mjerenje gamuta barem jedne digitalne kamere.

Rok za predaju rada: 12. lipnja 2020.

UNIVERSITY OF ZAGREB
FACULTY OF ELECTRICAL ENGINEERING AND COMPUTING

FINAL PAPER No. 6646

SYSTEM FOR EVALUATING THE COLOR RESPONSE OF A DIGITAL CAMERA SENSOR

Ivan Vnučec

Zagreb, June 2020.

UNIVERSITY OF ZAGREB
FACULTY OF ELECTRICAL ENGINEERING AND COMPUTING

FINAL PAPER No. 6646

SYSTEM FOR EVALUATING THE COLOR RESPONSE OF A DIGITAL CAMERA SENSOR

Ivan Vnučec

Zagreb, June 2020.

UNIVERSITY OF ZAGREB
FACULTY OF ELECTRICAL ENGINEERING AND COMPUTING
BACHELOR THESIS COMMITTEE

Zagreb, 10 March 2020

BACHELOR THESIS ASSIGNMENT No. 6646

Student: **Ivan Vnučec (0036507815)**
Study: Electrical Engineering and Information Technology
Module: Electronic and Computer Engineering

Title: **System for evaluating the color response of a digital camera sensor**

Description:

Build a controllable light source comprising of a multiplicity of light-emitting diodes and semiconductor lasers covering the visible, near infrared and near ultraviolet spectrum: from 1000nm (near infrared) over the visible spectrum to 365 nm (near ultraviolet). The output intensity of the diodes/lasers should be remotely controllable via USB and/or BlueTooth. Demonstrate the use of the developed instrument to evaluate the color gamut of at least one digital camera sensor.

Issue date: 13 March 2020
Submission date: 12 June 2020

Mentor:
Associate Professor Dubravko Babić, PhD

Committee Chair:
Full Professor Mladen Vučić, PhD

Committee Secretary:
Assistant Professor Tomislav Petković, PhD

SVEUČILIŠTE U ZAGREBU
FAKULTET ELEKTROTEHNIKE I RAČUNARSTVA
ODBOR ZA ZAVRŠNI RAD MODULA

Zagreb, 10. ožujka 2020.

ZAVRŠNI ZADATAK br. 6646

Pristupnik: **Ivan Vnučec (0036507815)**
Studij: Elektrotehnika i informacijska tehnologija
Modul: Elektroničko i računalno inženjerstvo

Zadatak: **Sustav za evaluaciju odziva boje digitalne kamere**

Opis zadatka:

Izraditi izvor svjetla sa više svjetlećih dioda i poluvodičkih lasera koji pokrivaju vidljivi te bliski infracrveni i ultraljubičasti dio spektra: od 1000nm (infracrveni spektar) preko vidljivog spektra do 365 nm (bliski ultraljubičasti spektar). Intenzitet svjetla iz svake diode će se kontrolirati preko USB sučelja ili preko BlueTooth sučelja. Demonstrirati korištenje razvijenog uređaja za mjerenje gamuta barem jedne digitalne kamere.

Zadatak uručen pristupniku: 13. ožujka 2020.
Rok za predaju rada: 12. lipnja 2020.

Mentor:
Izv. prof. dr. sc. Dubravko Babić

Djelovođa:
Doc. dr. sc. Tomislav Petković

Predsjednik odbora za završni rad modula:
Prof. dr. sc. Mladen Vučić

Za Kviricu.

Table of Contents

1. Introduction 1

1.1. Motivation 1

1.2. Goal 2

2. Device 3

2.1. Requirements 3

2.2. Principle of operation 3

2.2.1. Communication 4

2.2.2. CPU 4

2.2.3. Light-source array 5

3. Usage 8

3.1. Power 8

3.2. Light-source array 8

3.3. Communication 8

USB 8

Bluetooth 9

Commands 9

4. Demonstration 11

4.1. Procedure 11

4.1.1. Bluetooth connection 11

4.1.2. USB communication 13

Conclusion 15

Literature 16

Abstract 17

Sažetak (Croatian) 18

Appendix A: Useful URL-s 19

Appendix B: PCB documentation 20

B.1 Schematic sheet documents 20

B.2 PCB layout 28

B.3 PCB 3D View 29

Appendix C: Datasheets 30

C.1 STM32F103C8T6 microcontroller 30

C.2 DAC5574 DAC 31

C.3 OPA4490 OP-AMP 32

1. Introduction

1.1. Motivation

Our main goal is to distinguish various types of light sources based on their color response. From the previous laboratory experiments where we had studied color gamut response from different kinds of lamps (LED, RGB LED, HPS, Fluorescent, etc.) we hypothesized that it is possible to determine the type of streetlamp only by looking at their color gamut.

Figure 1 portrays how certain kinds of lamps fall into their region and based on in what region they are in, we might decide their type.

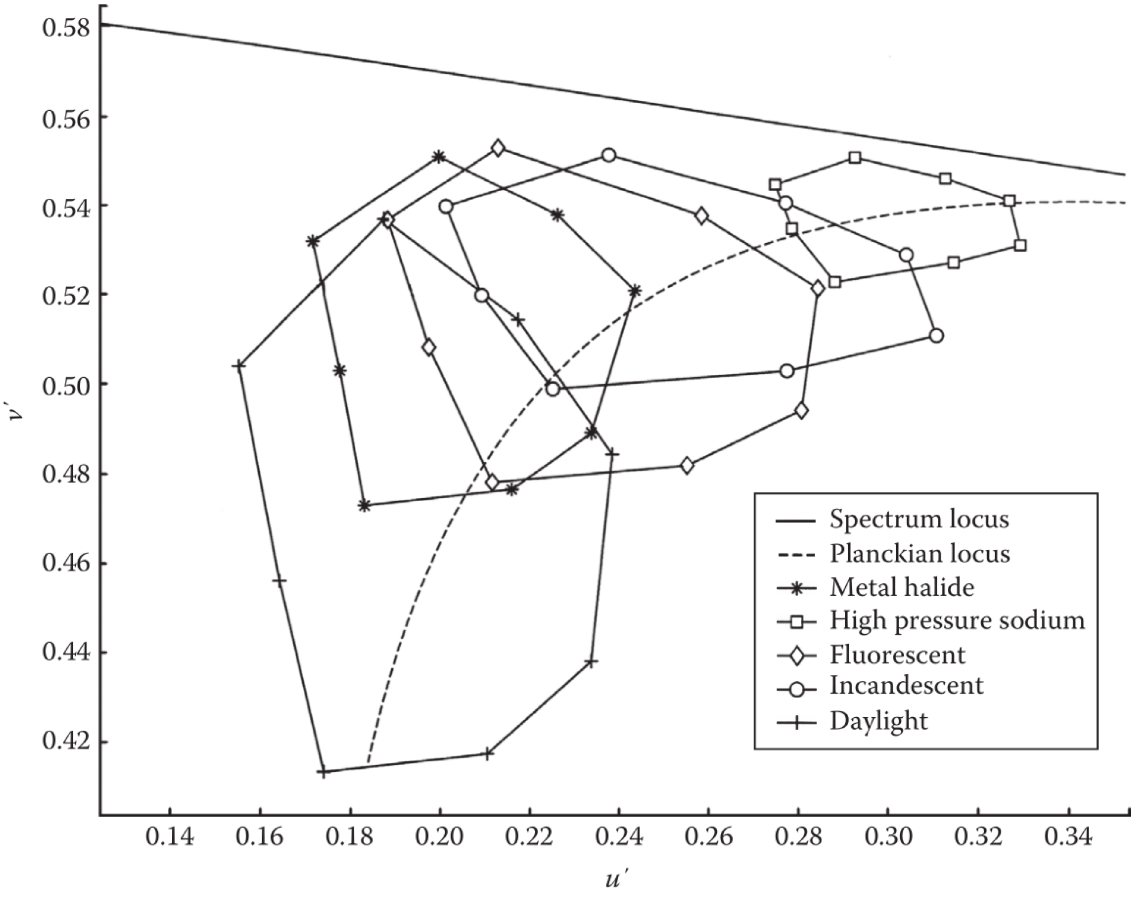

Figure 1 The color gamuts for high-pressure sodium (HPS), incandescent, fluorescent, and metal halide light sources, and the CIE Standard Illuminant D65, simulating daylight, all plotted on the CIE 1976 UCS diagram. The dotted curve is the Planckian locus. (Boyce, 2014)

A method for capturing color gamut response, in short, is firstly capturing the radiating light from the light source with a digital camera and then calculate the so-called CIE chromaticity x and y and z coordinates based on the light source color. For the complete formulations, please see (Boyce, 2014).

1.2. Goal

To test our hypothesis, one would need to capture hundreds of responses from numerous light sources. Changing the type and brightness of each light source would be an enormous job.

We would like to have a device that contains numerous different monochromatic light sources that can turn every one of those light sources independently with user-selectable light intensity.

2. Device

2.1. Requirements

Below is a list of requirements that the device must have:

- The device must contain an array of twenty two-leaded connectors to connect twenty light sources (LEDs, Low-power lasers, etc.).
- The device must have the ability to receive commands ether through Universal Serial Bus (USB) or wirelessly with the Bluetooth protocol. Commands must be in a simple ASCII string form.
- Every command must specify which light source to turn on with defined intensity.
- The board must be powered with a conventional EU plug (230V, 50 Hz).

2.2. Principle of operation

Figure 2 depicts the general functional block diagram. On the left side, we have two communication ports: USB and Bluetooth. Both of those communication channels are unidirectional: from the user mobile phone or PC to the Device.

Between communication ports and light-sources-array rests low-cost general-purpose microcontroller that acts as a bridge between the two. Its function is to encode the user commands into an analog voltage that would drive each light-source.

Next to the microcontroller is a light-source-array consisting of 20 exchangeable monochromatic light-sources and their drivers.

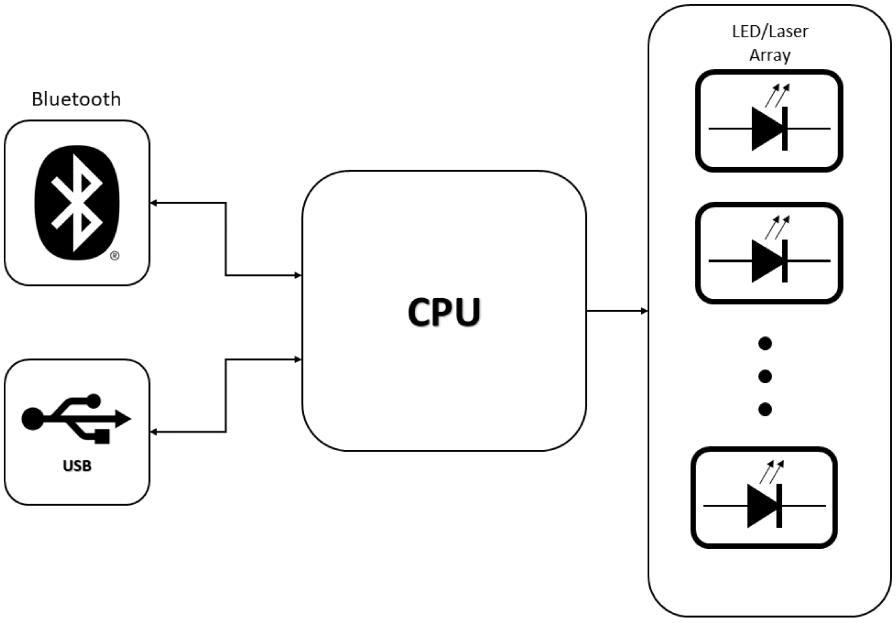

Figure 2 - Functional block diagram

2.2.1. Communication

Bluetooth

Bluetooth stack and communication protocol is a complex topic on its own so as a result, we have chosen a Bluetooth module. With the module, data between the two Bluetooth nodes goes over a UART protocol with ASCII coded strings.

We plan to use a well-known AT-09 module. Other modules could also be of good use as long as they have the simple UART interface with 3.3 volts power supply.

USB

A microcontroller has native USB support (both hardware and software). The user commands are transmitted over the virtual COM port in ASCII decoded characters.

2.2.2. CPU

For the CPU we chose a general-purpose STM32F103 series microcontroller (MCU), which has all the functionalities we need: USB, USART, and two I^2C communication

ports. Also, it contains 64 KB Flash of memory and 20 KB RAM, which is sufficient for our application (STMicroelectronics , 2020).

The MCU receives commands through USB or Bluetooth, encodes them, and then sends them to the Light source array over I^2C communication. The latter part is explained later in detail.

2.2.3. Light-source array

Overview

Figure 3 portrays a light-source array consisting of 20 independent LED or laser diodes. Each light-source lights up with the desired amount of current.

The array consists of modules where every single module has analog driver circuitry that governs the amount of current through each diode.

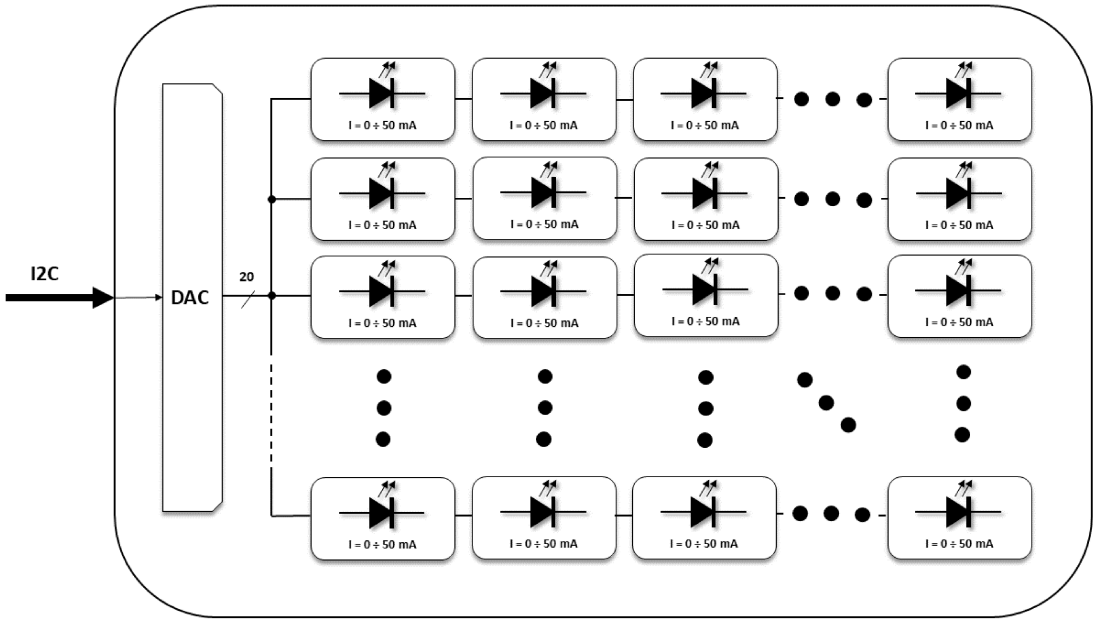

Figure 3 - Light-source array

Every cell in the figure above consists of one Digital-to-analog converter (DAC), one Operational amplifier (OP-AMP), one MOSFET transistor, one current-sense shunt resistor, and one header connector for the diode.

Principle of operation

I_d is the desired current through the diode ranging from 0 to 50 mA by design. This current creates a voltage drop over current-sense resistor R_s in the range from 0 to 5 volts. This voltage drop then goes to the OP-AMP, which then compares the desired voltage (+ side) to the voltage drop across R_s resistor (- side). The DAC output voltage ranges from 0 to 5 volts. Based on the difference, OP-AMP drives the gate of the MOSFET, which then regulates the current through the diode by varying its drain-to-source voltage drop.

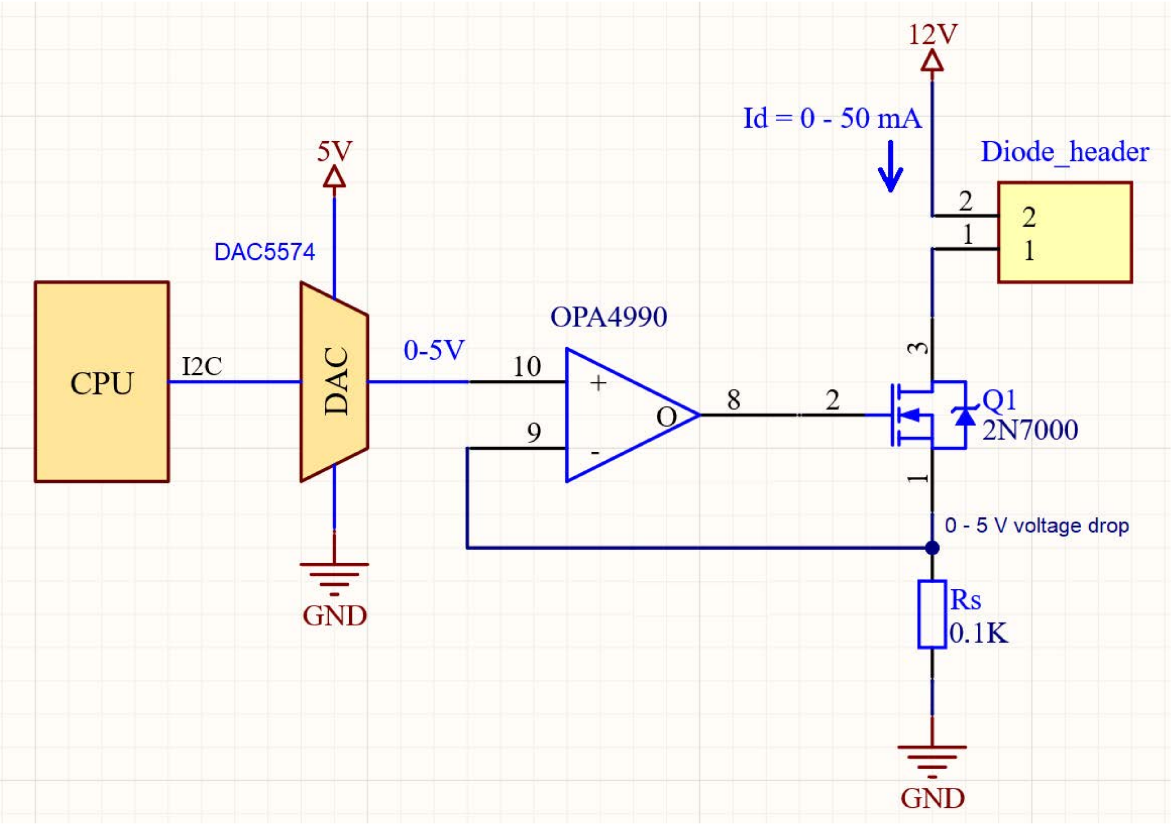

Figure 4 - Light-source array cell

DAC

DAC5574 is a rail-to-rail, quad-channel, 8-bit digital-to-analog converter (DAC) with output voltage range from 0 to 5 volts. It consists of 4 DACs in one single package.

Communication with the DACs goes over an I^2C interface.

Least significant DAC output bit (LSB) is equivalent to:

$$U_{LSB} = \frac{Uout}{2^{n\_bits}} = \frac{5\ \text{V}}{256\ \text{bit}} \cong 19.531\ \frac{\text{mV}}{\text{bit}}.$$

OP-AMP

OPA4990 is a general-purpose operational amplifier with rail-to-rail input/output voltage. It consists of 4 OP-AMPs in one package.

OP-AMP outputs are directly connected to MOSFETs gates.

OP-AMP so-called Short-circuit-input principle gives us the LSB diode current:

$$I_{d,LSB} = \frac{\mathrm{U}_{LSB}}{Rs} \cong \frac{19.531\ {}^{\mathrm{mV}}/_{\mathrm{bit}}}{100\ \Omega} \cong 0.1953 \frac{\mathrm{mA}}{\mathrm{bit}}\ .$$

Hence, with the 8-bit DAC output, we have 0-50 mA current swing with the 0.1953 mA sensitivity.

MOSFET

2N7000 is a general-purpose, enhanced, TO-92 package, MOSFET. Drain-to-source voltage drop dictates a desired current through the diode.

Power supply voltage

We chose 12 Volts power supply voltage since it covers a wide forward-voltage-drop range.

3. Usage

This section describes general procedures of using the device.

3.1. Power

Power supply

To power up the device, the user must plug the device into 230 V, 50 Hz EU electrical socket.

If there are no errors, the status LED should be blinking and the light source array is completely turned off.

Fuses

To prevent the device from permanent electric damage user must install two types of fuses:

- Slow blow, 40 A, 250 V for 12 V rail and,
- Slow blow, 20 A, 250 V for 9 V rail.

3.2. Light-source array

To place individual light sources, firstly turn the device off, and then put two leads into their appropriate header paying attention to leads polarity.

3.3. Communication

USB

To use USB communication, the user should connect the PC and the device with a USB 2.0 type B connector cable.

The device should appear on a PC as a virtual COM port. Communication with the device is established via standard Serial port monitors apps. See **Demonstration** heading for more information.

Bluetooth

To use Bluetooth communication user must establish a connection between the two Bluetooth devices. Next, the user should use standard Serial port monitors apps. See **Demonstration** heading for more information.

Commands

Commands are sent using traditional Serial port monitors with the format of simple commands explained below.

Commands format

To address every single light source, we have developed a format that every user must follow. The format is:

LED_XX_YYY

Where:

- "LED" is an abbreviation meaning Light Emitting Diode,
- "XX" is a leading zero, two-digit, natural number (e.g., 00, 01, 02 , … , 98 , 99) representing a diode ID and
- YYY is a leading zero, natural number (e.g., 000, 001, 002…) representing a current trough the light source in the range from 0 which means 0 mA to the 255 meaning 50 mA (see **Light-source array** heading).

For example, to set a 3.52 mA current through a diode with an ID No. 7 (see **Figure 5**), a user must send an ASCII command string:

LED_07_018

Where the current value "018" was calculated as:

$$round\left(\frac{3.52\ \text{mA}}{50\ \text{mA}} \cdot 255\right) = 18$$

The highest YYY diode current is 50 mA by design. If a user sends a command with a higher current requirement (> 255), the current will be set to 50 mA. To turn off the diode, the user should put 000 as the YYY value.

Diode ID enumeration is shown in the figure below. First ID (00) is physically located in the upper-left corner. Next ID (01) is located next to it to the right side…

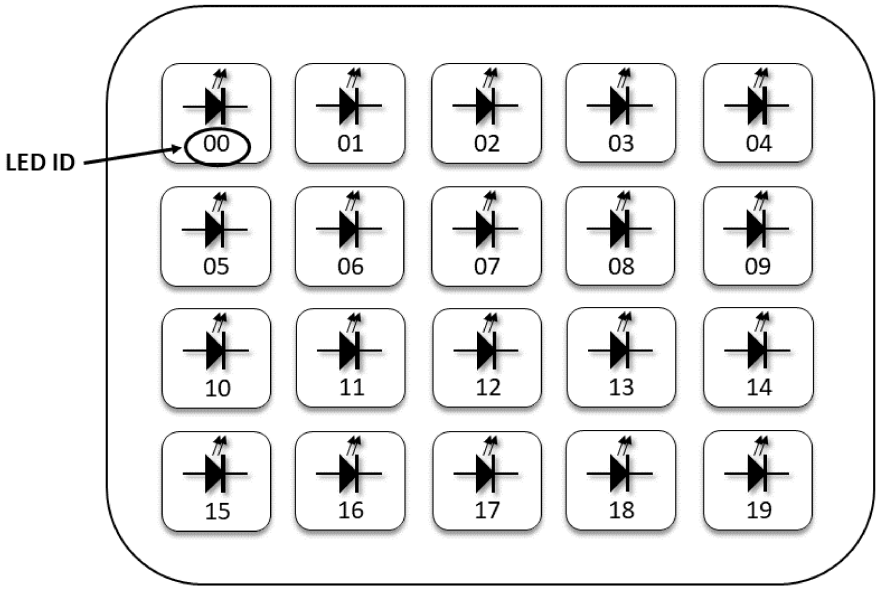

Figure 5 - Physical layout of the light-source array

4. Demonstration

In this chapter, we will demonstrate the usage of the system in real usage conditions.

4.1. Procedure

Before connecting the device into mains, populate the light source array with desired light sources.

Next, turn on the device by inserting high-voltage terminals into its appropriate headers. Ensure that the other end of the cable is not connected to the mains voltage.

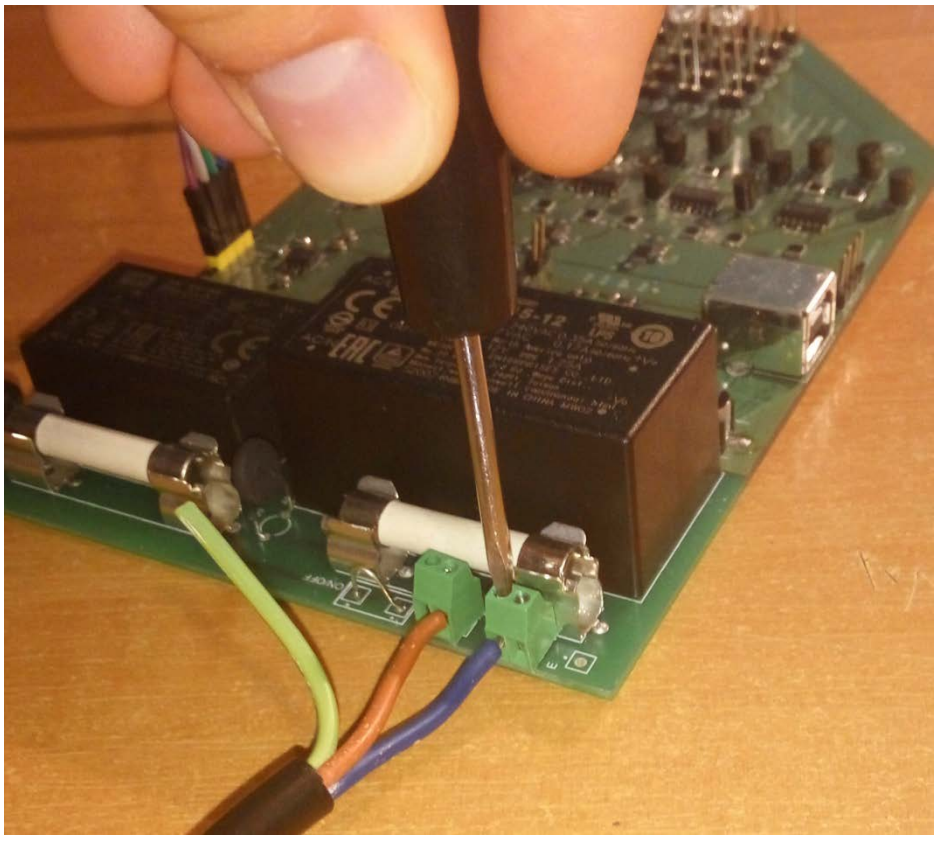

Figure 6 - Inserting high-voltage main wires.

4.1.1. Bluetooth connection

To use Bluetooth connection, make sure you have an installed app that can send ASCII characters over Bluetooth. For Android, we recommend the “Serial Bluetooth Terminal

1.32” app and for Windows, we recommend “Termite”. Similar apps exist for iOS but we have not tried it yet.

Next, find a Bluetooth device and connect to it. After being connected, the user can send the commands to turn on a LED.

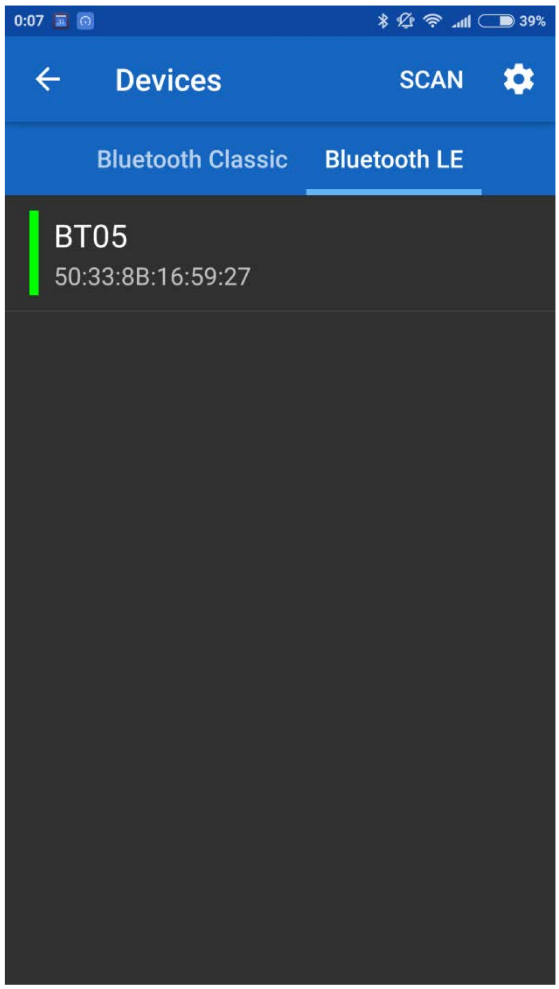

Figure 8 – Available connection to the device.

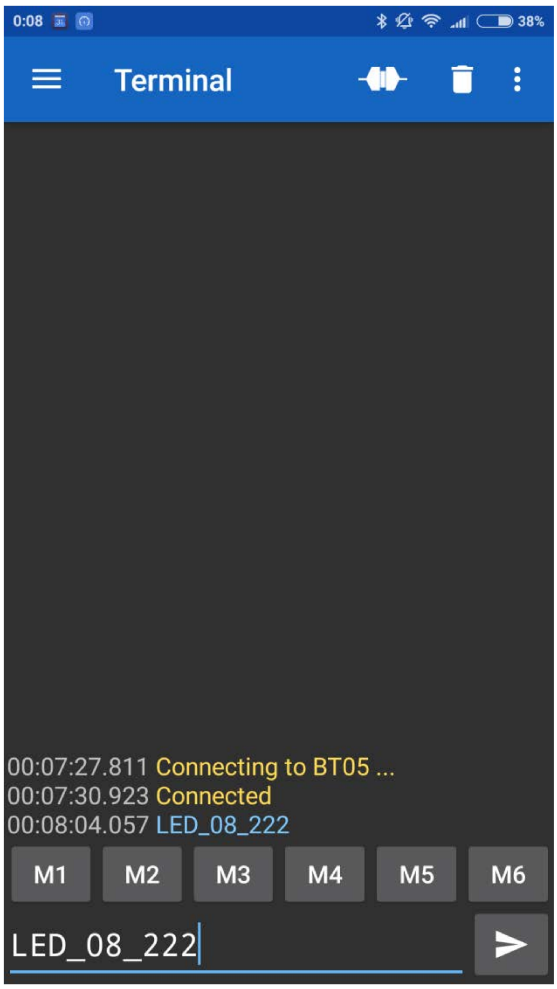

Figure 7 – Command transfer.

4.1.2. USB communication

To use USB communication user must connect the USB cable into an appropriate connector.

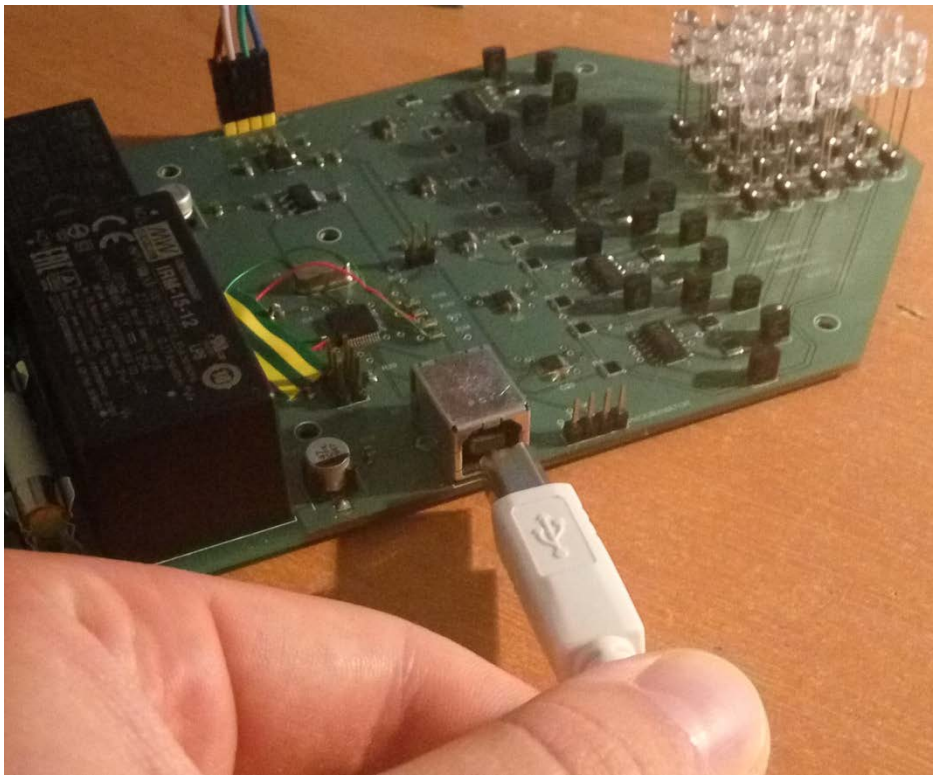

Figure 9 - USB connector insertion.

Next, open your favorite Serial COM port program. We recommend “Termite” for Windows operating system. Set the COM port settings as in the picture below and start to send commands to the device.

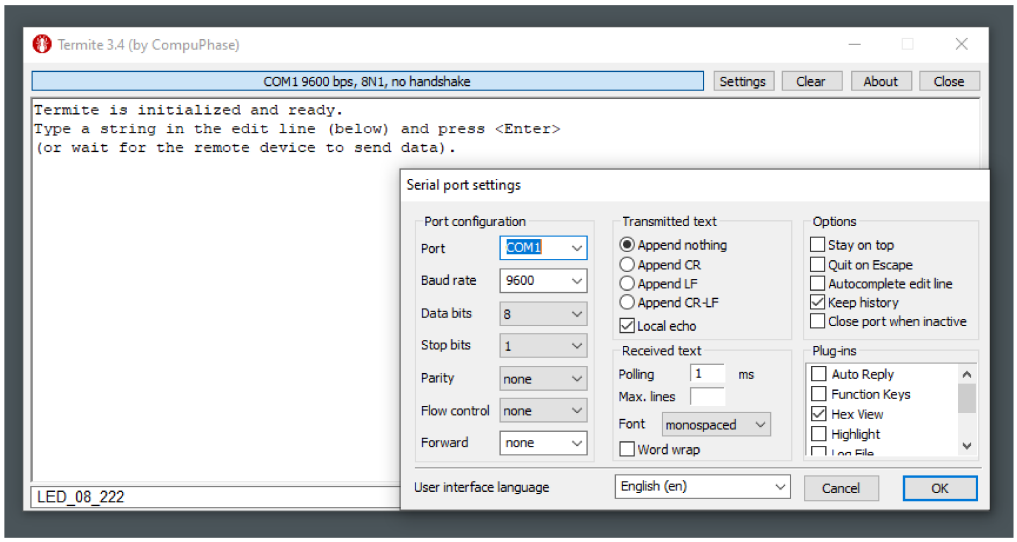

Figure 10 - COM port settings.

After completing the steps above, the LED should light up.

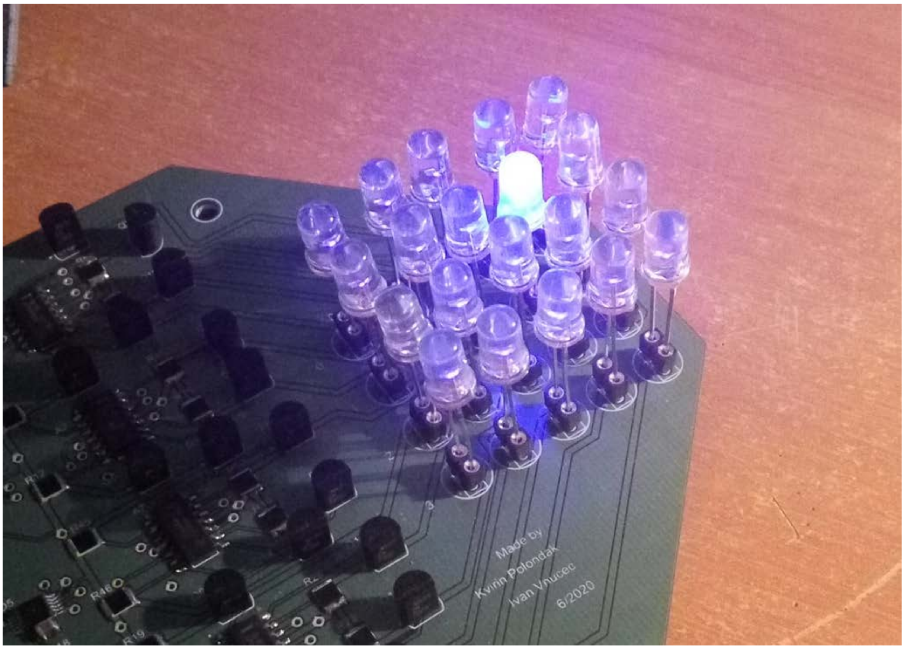

Figure 11 - Command had lit up the LED.

Conclusion

In this paper, we have presented the main functionalities regarding the system for evaluating the color response of a digital camera sensor. We have presented its main principles of operation and usage and in the end, we have demonstrated how to start a device to produce further experiments.

Literature

Boyce, P. R. (2014). *Human Factors in Lighting.* Boca Raton: CRC Press.

STMicroelectronics . (7. May 2020). *STMicroelectronics* . Preuzeto 7. May 2020 iz Microcontrollers & Microprocessors: https://www.st.com/en/microcontrollers-microprocessors/stm32f103.html

Texas Instruments. (n.d.). *Product page.* Preuzeto May 2020 iz DAC5574 product page: http://www.ti.com/product/DAC5574

Texas Instruments. (n.d.). *Products.* Preuzeto May 2020 iz OPA4990 product page: https://www.ti.com/product/OPA4990

Abstract

System for evaluating the color response of a digital camera sensor

Build a controllable light source comprising of a multiplicity of light-emitting diodes and semiconductor lasers covering the visible spectrum: from near infrared (1000 nm) to UVA (365 nm). The output intensity of the diodes/lasers should be remotely controllable via USB and/or Bluetooth. Demonstrate the use of the developed instrument to evaluate the color gamut of at least one digital camera sensor.

Sažetak (Croatian)

Sustav za evaluaciju odziva boje digitalne kamere

Izraditi izvor svjetla od više svjetlećih dioda i poluvodičkih lasera koji pokrivaju vidljivi dio spektra: od 1000 nm (infracrvena boja) do 365 nm (ultraljubičasta boja A). Intenzitet svjetla iz svake diode će se kontrolirati preko USB sučelja ili preko Bluetooth sučelja. Demonstrirati korištenje razvijenog uređaja za mjerenje gamuta barem jedne digitalne kamere.

Appendix A: Useful URL-s

Below we have listed the links to the GitHub account where there is stored complete documentation to build the System: from complete software to the hardware. User is encouraged to freely study and use the documentation.

- Main page:
  - https://github.com/KvirinPolondak/Kalibrator
- Altium PCB project:
  - https://github.com/KvirinPolondak/Kalibrator/tree/master/Kalibracija
- Software:
  - https://github.com/KvirinPolondak/Kalibrator/tree/master/Programski_kod

Appendix B: PCB documentation

B.1 Schematic sheet documents

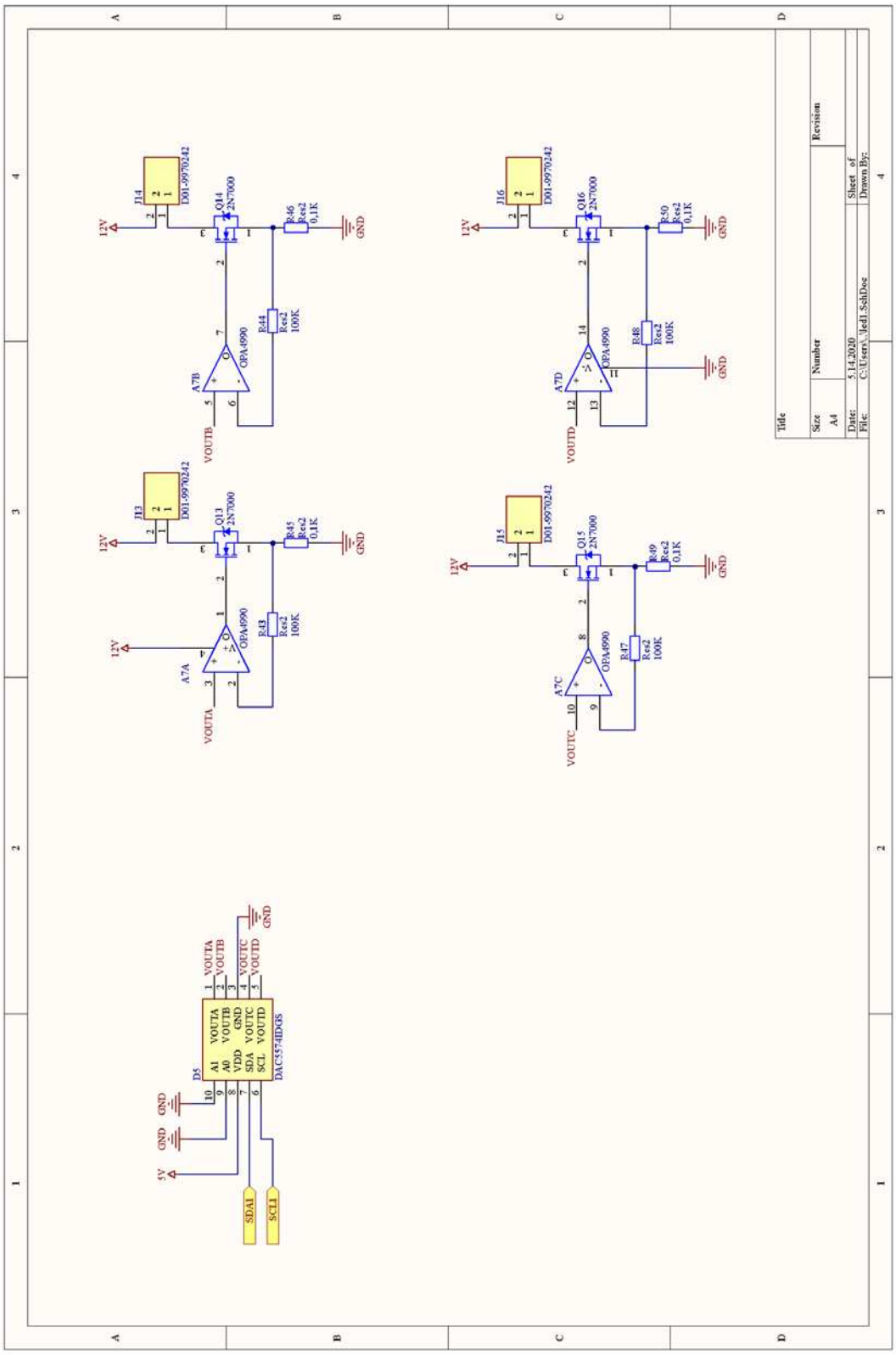

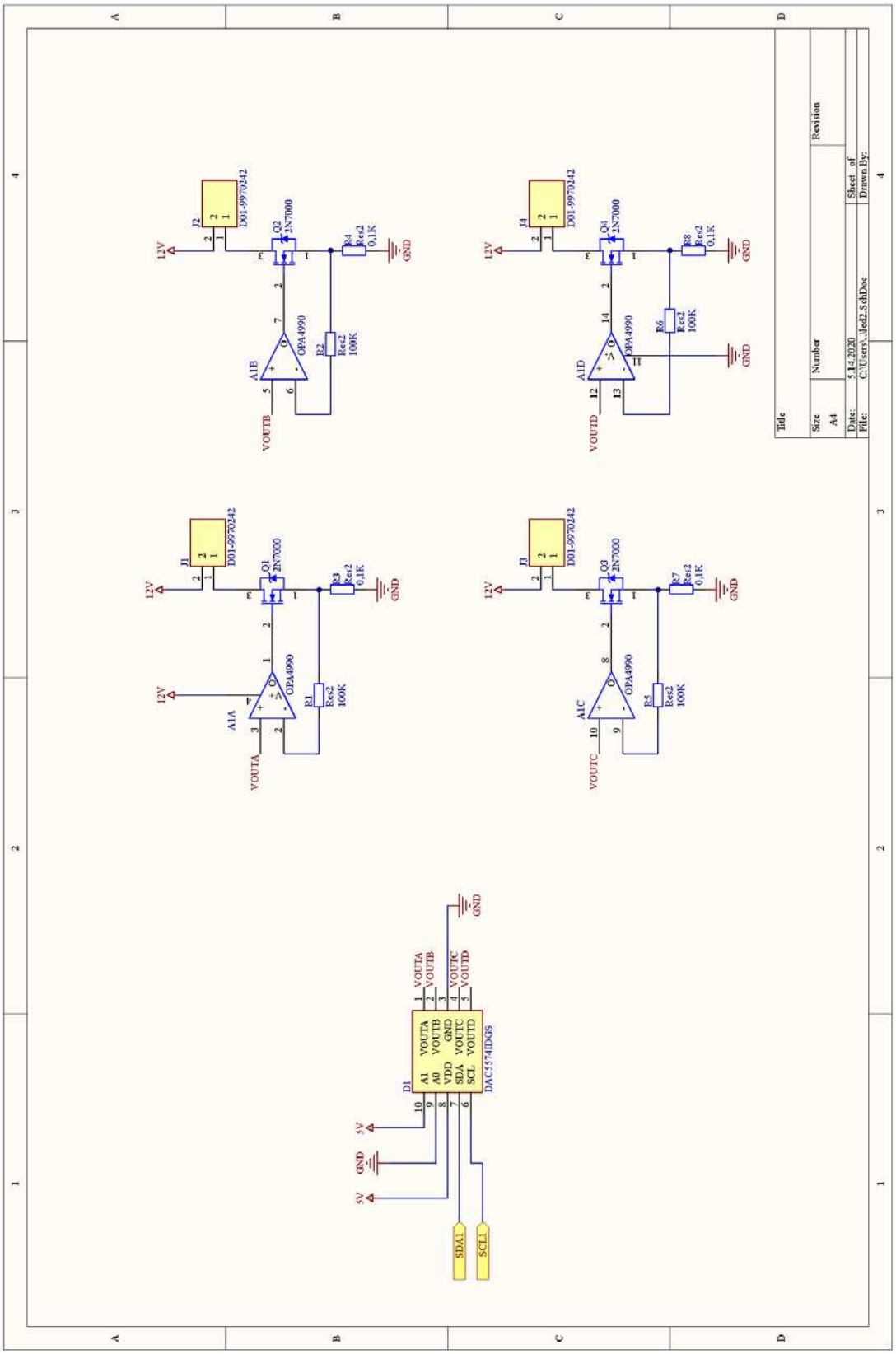
12V
GND
5V
SDA1
SCL1
VOUTA
VOUTB
VOUTC
VOUTD
J1
J2
J3
J4
Q1
Q2
Q3
Q4
R1
R2
R3
R4
R5
R6
R7
R8
A1A
A1B
A1C
A1D
D1
DAC5574IDGS
OPA4990
2N7000
Res2
0,1K
100K
Title
Size
A4
Number
Revision
Date:
5.14.2020
Sheet of
File:
C:\Users\..\led2.SchDoc
Drawn By:

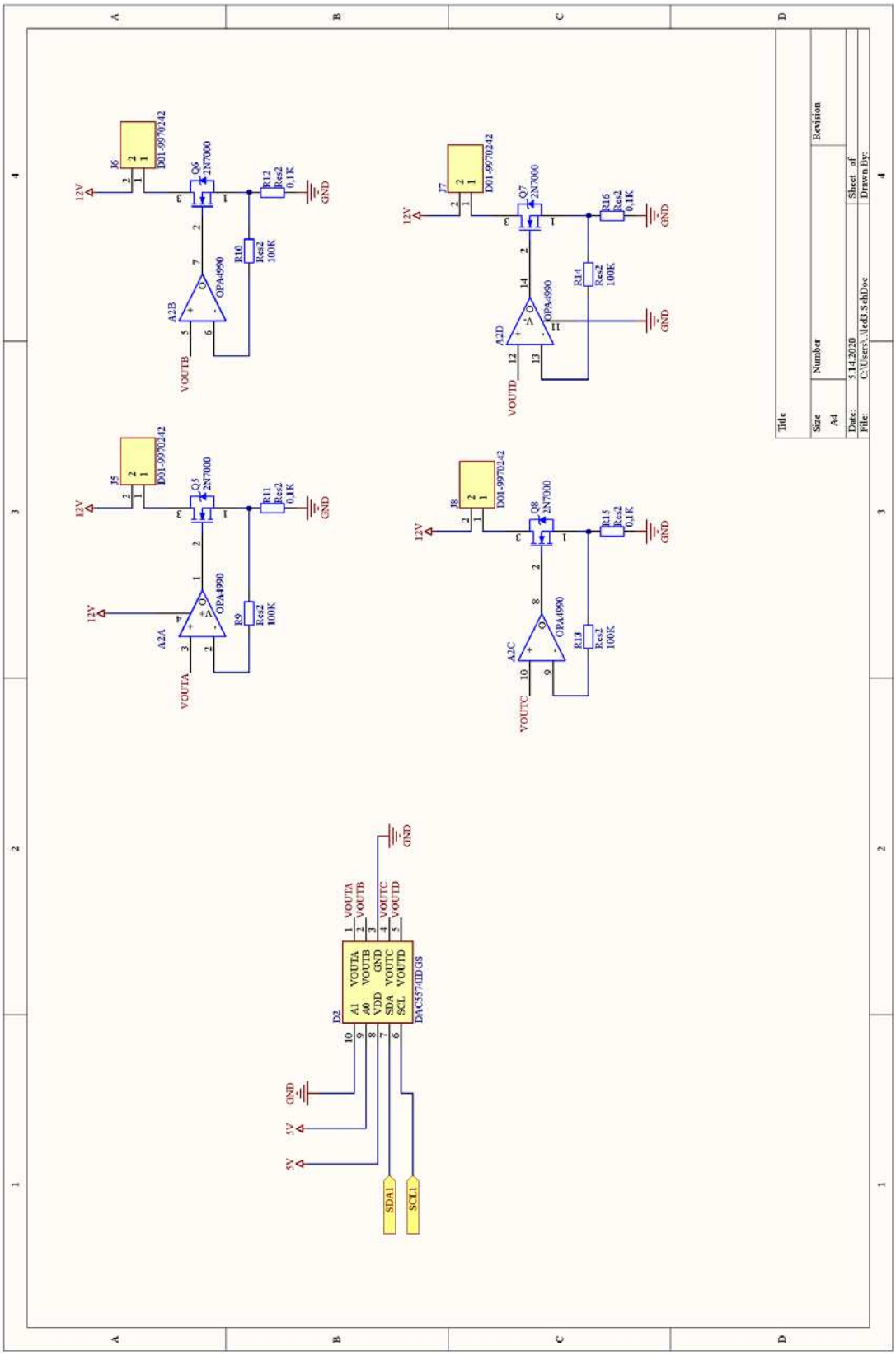
Title
Size
A4
Number
Revision
Date:
5.14.2020
Sheet of
File:
C:\Users\..\led3.SchDoc
Drawn By:
J6
D01-9970242
Q6
2N7000
R12
Res2
0.1K
R10
Res2
100K
OPA4990
A2B
VOUTB
J7
D01-9970242
Q7
2N7000
R16
Res2
0.1K
R14
Res2
100K
A2D
VOUTD
J5
D01-9970242
Q5
2N7000
R11
Res2
0.1K
R9
Res2
100K
A2A
VOUTA
J8
D01-9970242
Q8
2N7000
R15
Res2
0.1K
R13
Res2
100K
A2C
VOUTC
12V
GND
D2
DAC5574IDGS
VOUTA
VOUTB
GND
VOUTC
VOUTD
A1
A0
VDD
SDA
SCL
5V
SDA1
SCL1

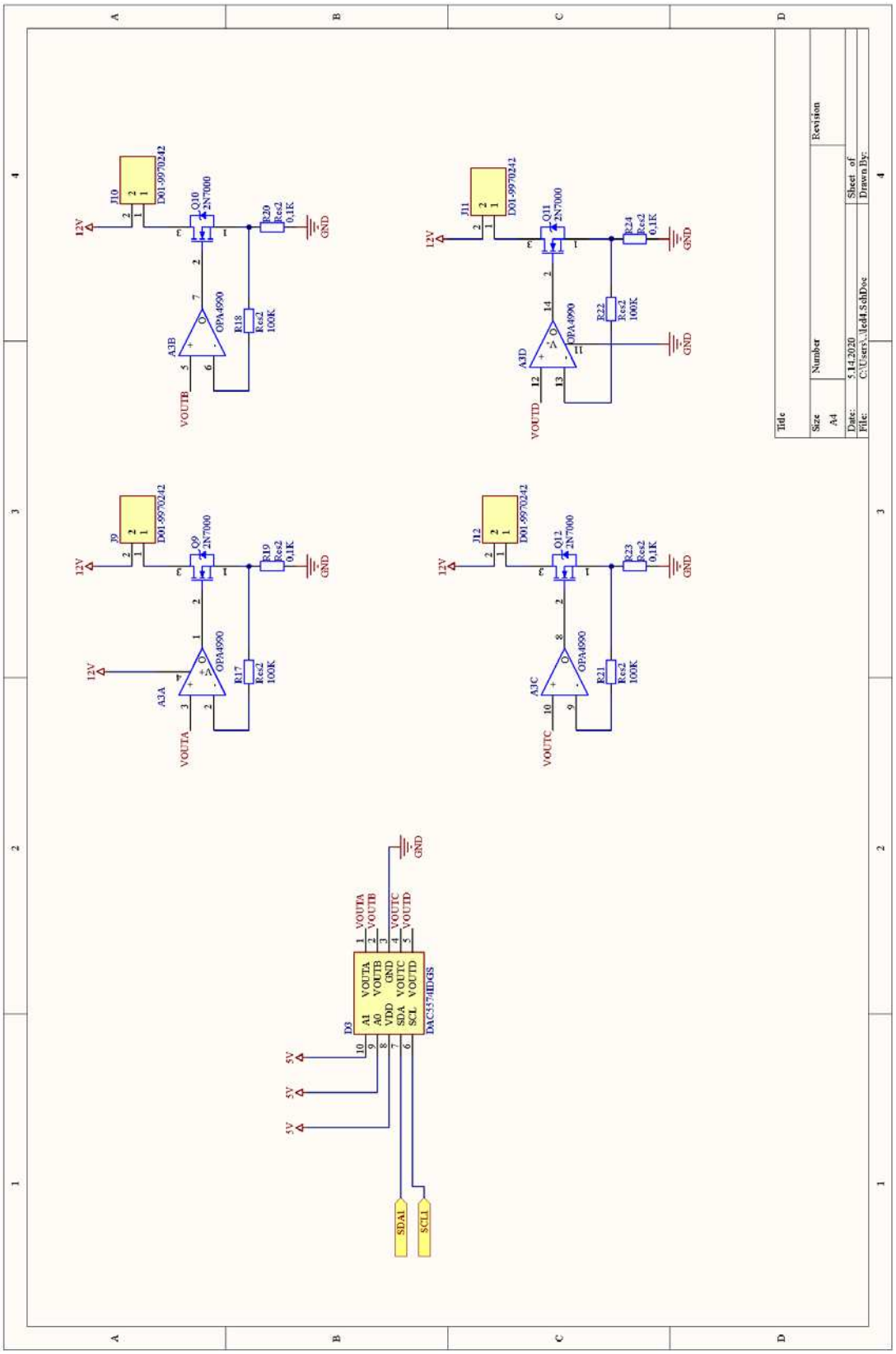
Title
Size
A4
Number
Revision
Date: 5.14.2020
File: C:\Users\..\led4.SchDoc
Sheet of
Drawn By:
J10
D01-9970242
Q10
2N7000
R20
Res2
0.1K
R18
Res2
100K
A3B
OPA4990
VOUTB
J11
Q11
R24
R22
A3D
VOUTD
J9
Q9
R19
R17
A3A
VOUTA
J12
Q12
R23
R21
A3C
VOUTC
12V
GND
5V
D3
DAC5574IDGS
VOUTA
VOUTB
VOUTC
VOUTD
A1
A0
VDD
SDA
SCL
SDA1
SCL1

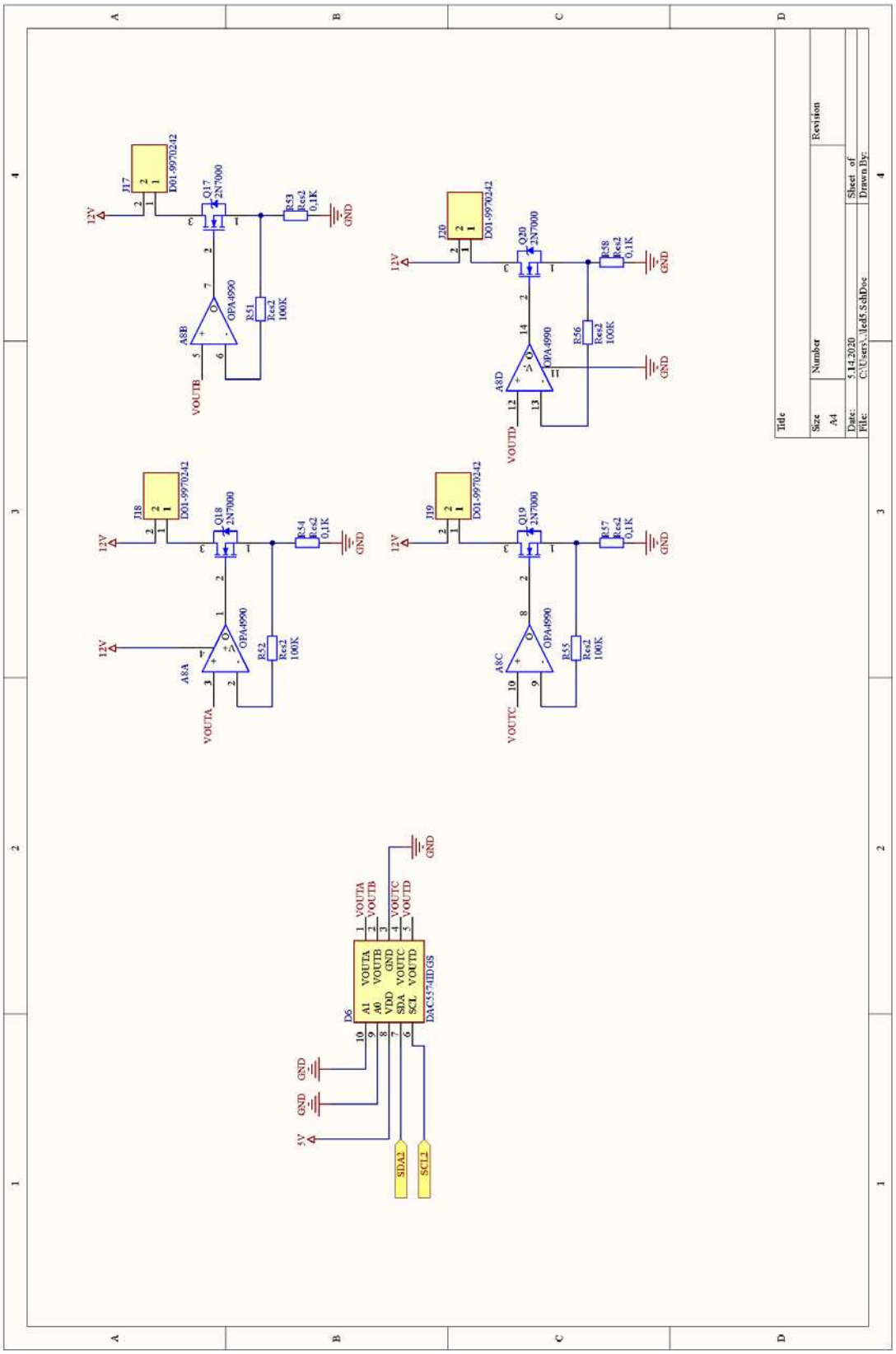
Title
Size
A4
Number
Revision
Date: 5.14.2020
File: C:\Users\..\led5.SchDoc
Sheet of
Drawn By:
J17
D01-9970242
Q17
2N7000
R53
Res2
0,1K
12V
GND
A8B
OPA4990
R51
Res2
100K
VOUTB
J20
D01-9970242
Q20
2N7000
R58
Res2
0,1K
A8D
OPA4990
R56
Res2
100K
VOUTD
J18
D01-9970242
Q18
2N7000
R54
Res2
0,1K
A8A
OPA4990
R52
Res2
100K
VOUTA
J19
D01-9970242
Q19
2N7000
R57
Res2
0,1K
A8C
OPA4990
R55
Res2
100K
VOUTC
D6
DAC5574IDGS
A1
A0
VDD
SDA
SCL
VOUTA
VOUTB
GND
VOUTC
VOUTD
5V
SDA2
SCL2

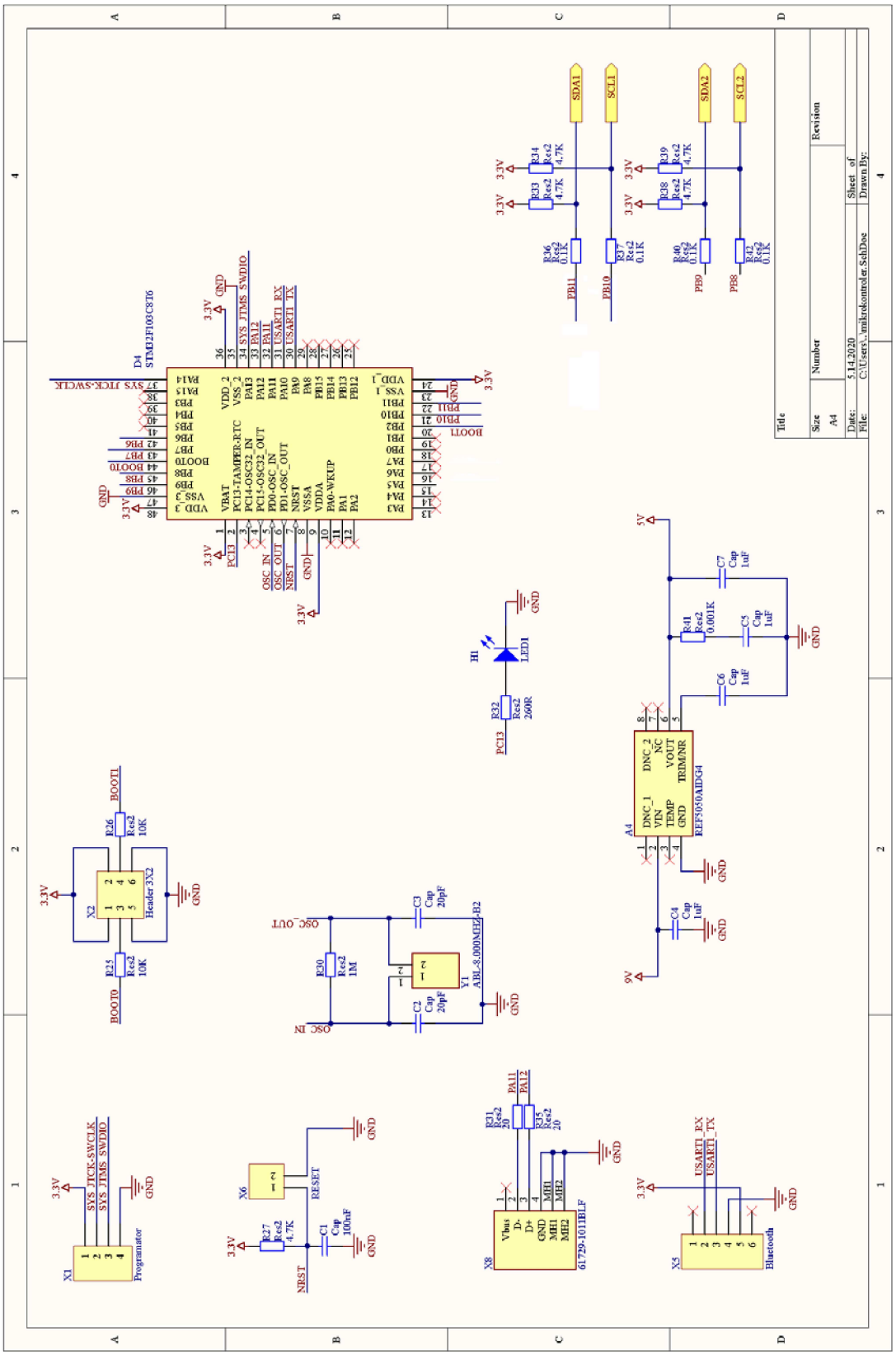

STM32F103C8T6
REF5050AIDG4
ABL-8.000MHZ-B2
61729-1011BLF
Header 3X2
Programator
Bluetooth
LED1
Title
Size
A4
Number
Revision
Date: 5.14.2020
File: C:\Users\...\mikrokontroler.SchDoc
Sheet of
Drawn By:

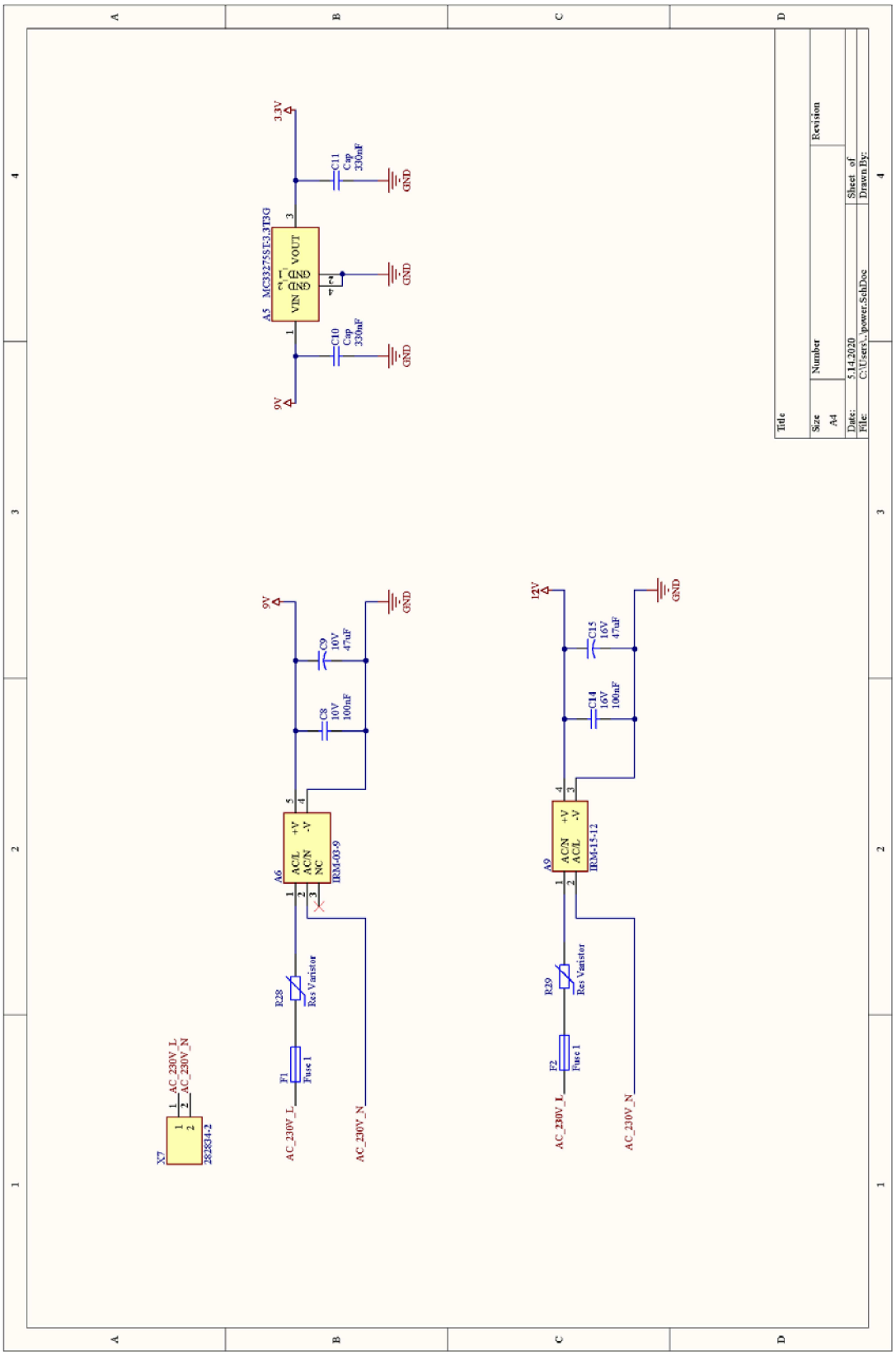
3.3V
C11
Cap
330nF
GND
A5 MC33275ST-3.3T3G
VIN VOUT
GND
C10
Cap
330nF
9V
C9
10V
47uF
C8
10V
100nF
A6
AC/L +V
AC/N -V
NC
IRM-03-9
F1
Fuse 1
R28
Res Varistor
AC_230V_L
AC_230V_N
X7
282834-2
12V
C15
16V
47uF
C14
16V
100nF
A9
AC/N +V
AC/L -V
IRM-15-12
F2
R29
Title
Size
A4
Number
Revision
Date:
5.14.2020
Sheet of
File:
C:\Users\...\power.SchDoc
Drawn By:

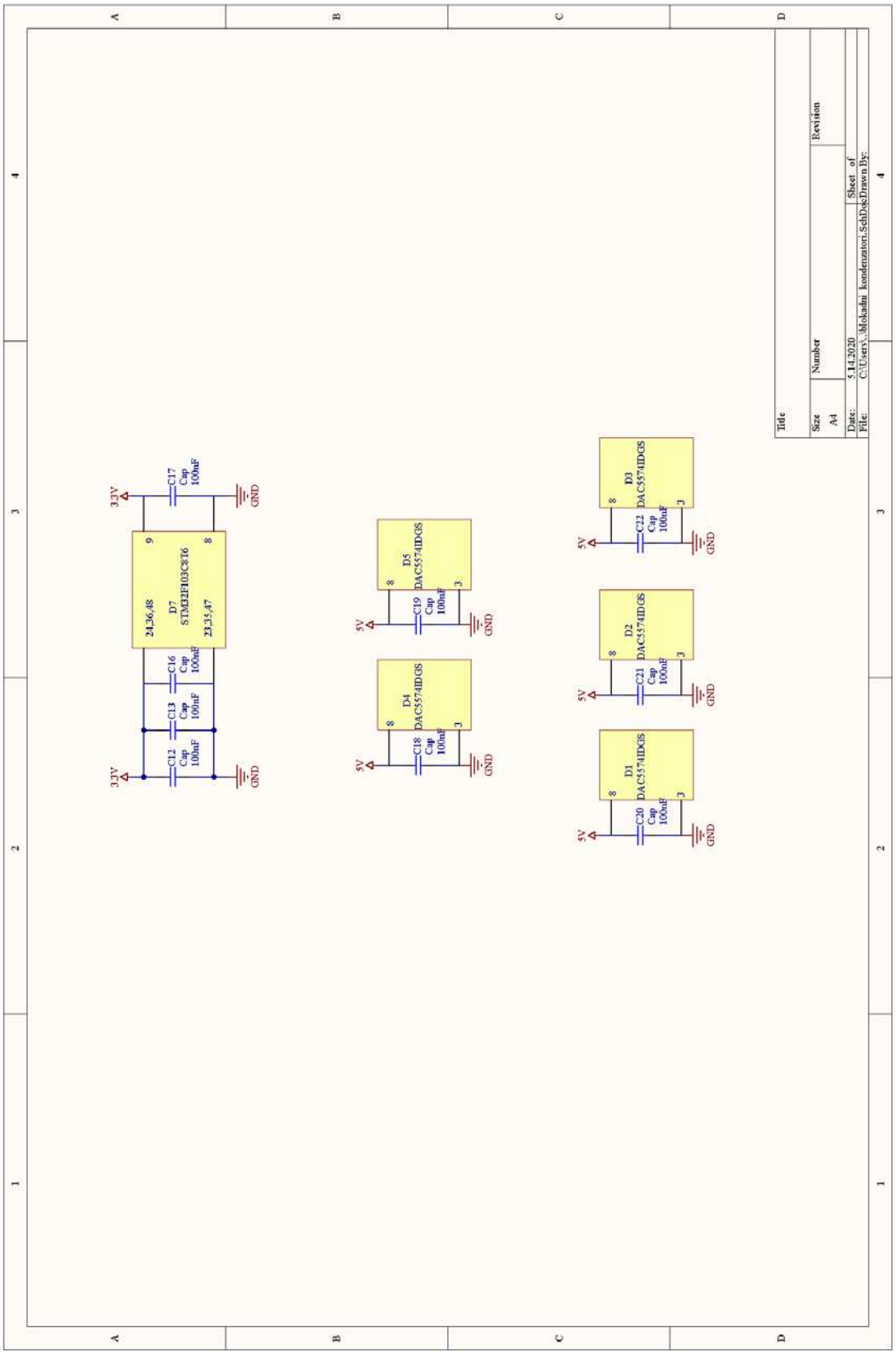
Title
Size
A4
Number
Revision
Date:
5.14.2020
Sheet of
File:
C:\Users\..\blokadni kondenzator.SchDoc
Drawn By:
3.3V
C17
Cap
100nF
GND
D7
STM32F103C8T6
24,36,48
23,35,47
C16
C13
C12
5V
D5
DAC5574IDGS
C19
D4
C18
D3
C22
D2
C21
D1
C20

B.2 PCB layout

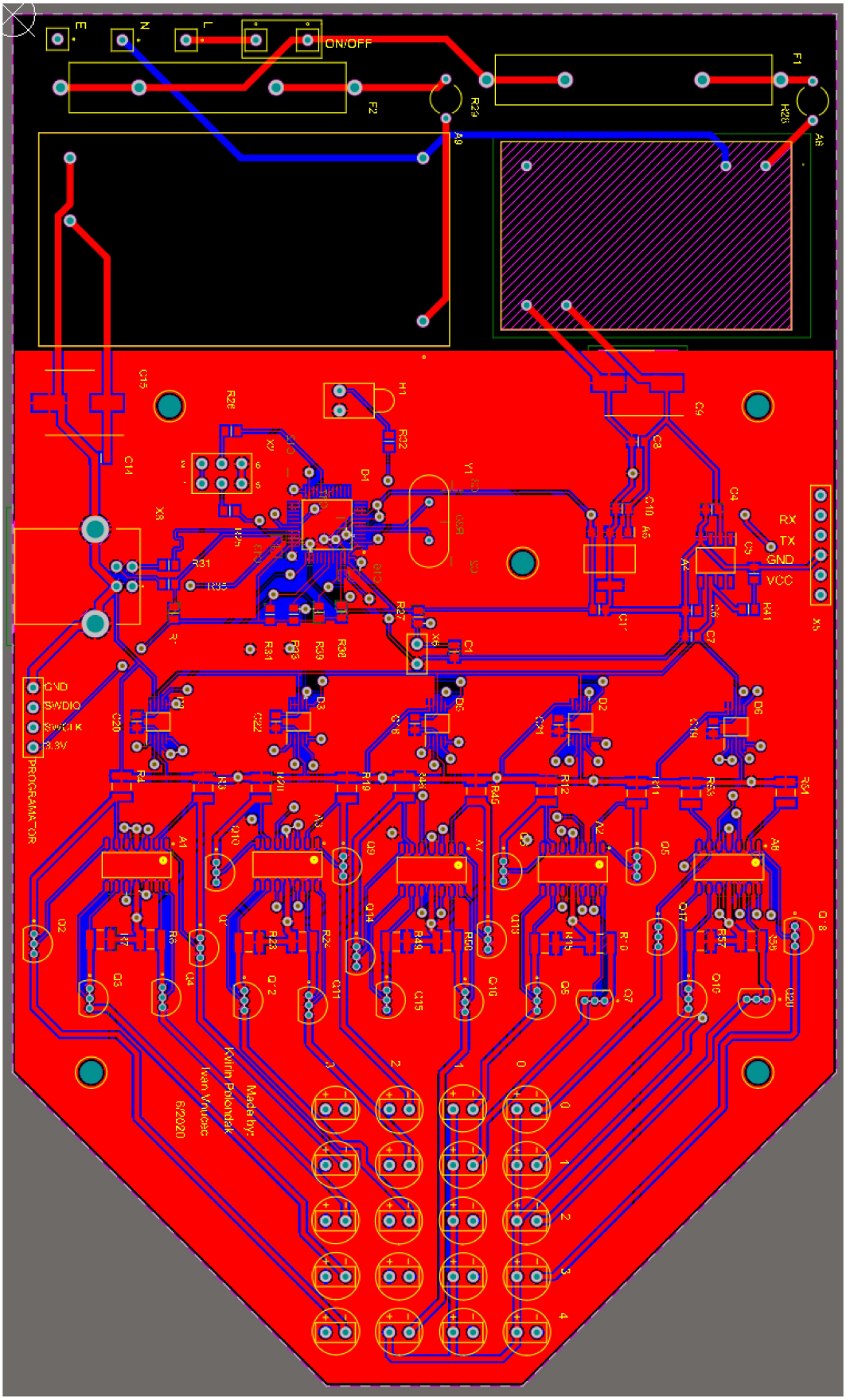

B.3 PCB 3D View

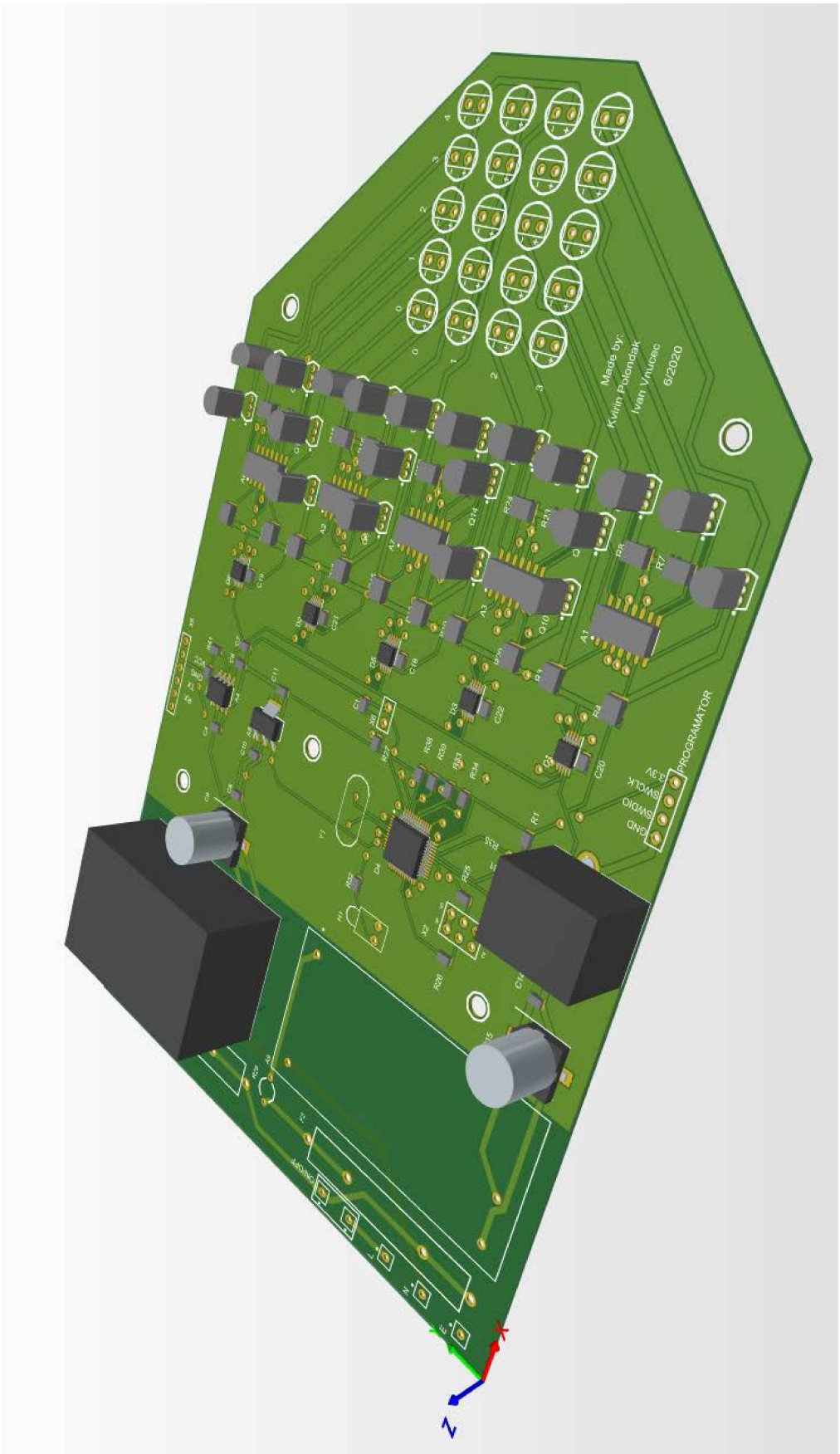

Appendix C: Datasheets

C.1 STM32F103C8T6 microcontroller

life.augmented

STM32F103x8
STM32F103xB

Medium-density performance line ARM®-based 32-bit MCU with 64 or 128 KB Flash, USB, CAN, 7 timers, 2 ADCs, 9 com. interfaces

Datasheet - production data

Features

- ARM® 32-bit Cortex®-M3 CPU Core
  - 72 MHz maximum frequency, 1.25 DMIPS/MHz (Dhrystone 2.1) performance at 0 wait state memory access
  - Single-cycle multiplication and hardware division
- Memories
  - 64 or 128 Kbytes of Flash memory
  - 20 Kbytes of SRAM
- Clock, reset and supply management
  - 2.0 to 3.6 V application supply and I/Os
  - POR, PDR, and programmable voltage detector (PVD)
  - 4-to-16 MHz crystal oscillator
  - Internal 8 MHz factory-trimmed RC
  - Internal 40 kHz RC
  - PLL for CPU clock
  - 32 kHz oscillator for RTC with calibration
- Low-power
  - Sleep, Stop and Standby modes
  - V_{BAT} supply for RTC and backup registers
- 2 x 12-bit, 1 µs A/D converters (up to 16 channels)
  - Conversion range: 0 to 3.6 V
  - Dual-sample and hold capability
  - Temperature sensor
- DMA
  - 7-channel DMA controller
  - Peripherals supported: timers, ADC, SPIs, I^2Cs and USARTs
- Up to 80 fast I/O ports
  - 26/37/51/80 I/Os, all mappable on 16 external interrupt vectors and almost all 5 V-tolerant

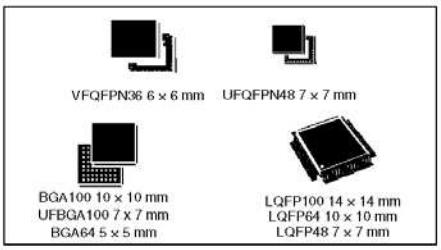

- Debug mode
  - Serial wire debug (SWD) & JTAG interfaces
- 7 timers
  - Three 16-bit timers, each with up to 4 IC/OC/PWM or pulse counter and quadrature (incremental) encoder input
  - 16-bit, motor control PWM timer with dead-time generation and emergency stop
  - 2 watchdog timers (Independent and Window)
  - SysTick timer 24-bit downcounter
- Up to 9 communication interfaces
  - Up to 2 x I^2C interfaces (SMBus/PMBus)
  - Up to 3 USARTs (ISO 7816 interface, LIN, IrDA capability, modem control)
  - Up to 2 SPIs (18 Mbit/s)
  - CAN interface (2.0B Active)
  - USB 2.0 full-speed interface
- CRC calculation unit, 96-bit unique ID
- Packages are ECOPACK®

Table 1. Device summary

Reference	Part number
STM32F103x8	STM32F103C8, STM32F103R8 STM32F103V8, STM32F103T8
STM32F103xB	STM32F103RB STM32F103VB, STM32F103CB, STM32F103TB

This is information on a product in full production. www.st.com

C.2 DAC5574 DAC

TEXAS INSTRUMENTS
www.ti.com

QUAD, 8-BIT, LOW-POWER, VOLTAGE OUTPUT, I^2C INTERFACE DIGITAL-TO-ANALOG CONVERTER

FEATURES

- *Micro*power Operation: 500 µA at 3 V V_{DD}
- Fast Update Rate: 188 kSPS
- Per-channel Power-down Capability
- Power-On Reset to Zero
- 2.7-V to 5.5-V Analog Power Supply
- 8-bit Monotonic
- I^2C™ Interface Up to 3.4 Mbps
- Data Transmit Capability
- On-Chip Output Buffer Amplifier, Rail-to-Rail Operation
- Double-Buffered Input Register
- Address Support for up to Four DAC5574s
- Synchronous Update Support for up to 16 Channels
- Operation From –40°C to 105°C
- Small 10 Lead MSOP Package

APPLICATIONS

- Process Control
- Data Acquisition Systems
- Closed-Loop Servo Control
- PC Peripherals
- Portable Instrumentation

DESCRIPTION

The DAC5574 is a low-power, quad channel, 8-bit buffered voltage output DAC. Its on-chip precision output amplifier allows rail-to-rail output swing to be achieved. The DAC5574 utilizes an I^2C compatible two wire serial interface supporting high-speed interface mode with address support of up to four DAC5574s for a total of 16 channels on the bus.

The DAC5574 uses V_{DD} and GND to set the output range of the DAC. The DAC5574 incorporates a power-on-reset circuit that ensures that the DAC output powers up at zero volts and remains there until a valid write takes place to the device. The DAC5574 contains a per-channel power-down feature, accessed via the internal control register, reducing the current consumption of the device to 200 nA at 5 V.

The low power consumption of this part in normal operation makes it ideally suited to portable battery operated equipment. The power consumption is less than 3mW at V_{DD} = 5 V reducing to 1 µW in power-down mode.

TI offers a variety of data converters with I^2C interface. See DACx57x family of 16/12/10/8 bit, single and quad channel DACs. Also see ADS7823 and ADS1100, 12-bit octal channel and 16-bit single channel ADCs.

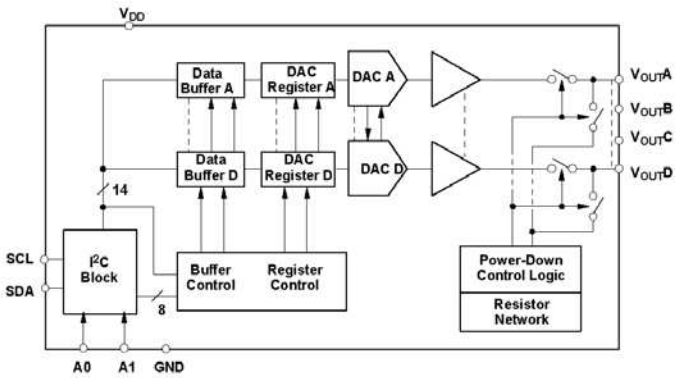

Please be aware that an important notice concerning availability, standard warranty, and use in critical applications of Texas Instruments semiconductor products and disclaimers thereto appears at the end of this data sheet.

I^2C is a trademark of Philips Corporation.

PRODUCTION DATA information is current as of publication date. Products conform to specifications per the terms of the Texas Instruments standard warranty. Production processing does not necessarily include testing of all parameters.

Copyright © 2003, Texas Instruments Incorporated

C.3 OPA4490 OP-AMP

TEXAS INSTRUMENTS

OPA990, OPA2990, OPA4990

SBOS933E – FEBRUARY 2019 – REVISED DECEMBER 2019

OPAx990 40-V Rail-to-Rail Input/Output, Low Offset Voltage, Low Power Op Amp

1 Features

- Low offset voltage: ±300 µV
- Low offset voltage drift: ±0.6 µV/°C
- Low noise: 30 nV/√Hz at 1 kHz
- High common-mode rejection: 115 dB
- Low bias current: ±10 pA
- Rail-to-rail input and output
- MUX-friendly/comparator inputs
  - Amplifier operates with differential inputs up to supply rail
  - Amplifier can be used in open-loop or as comparator
- Wide bandwidth: 1.1-MHz GBW
- High slew rate: 4.5 V/µs
- Low quiescent current: 120 µA per amplifier
- Wide supply: ±1.35 V to ±20 V, 2.7 V to 40 V
- Robust EMIRR performance: 78 dB at 1.8 GHz
- Differential and common-mode input voltage range to supply rail

2 Applications

- Multiplexed data-acquisition systems
- Test and measurement equipment
- Motor drive: power stage and control modules
- Power delivery: UPS, server, and merchant network power
- ADC driver and reference buffer amplifier
- Programmable logic controllers
- Analog input and output modules
- High-side and low-side current sensing
- High precision comparator

3 Description

The OPAx990 family (OPA990, OPA2990, and OPA4990) is a family of high voltage (40-V) general purpose operational amplifiers. These devices offer excellent DC precision and AC performance, including rail-to-rail input/output, low offset (±300 µV, typ), and low offset drift (±0.6 µV/°C, typ).

Unique features such as differential and common-mode input voltage range to the supply rail, high short-circuit current (±80 mA), high slew rate (4.5 V/µs), and shutdown make the OPAx990 an extremely flexible, robust, and high-performance op amp for high-voltage industrial applications.

The OPAx990 family of op amps is available in *micro*-size packages (such as X2QFN, WSON, and SOT-553), as well as standard packages (such as SOT-23, SOIC, and TSSOP), and is specified from –40°C to 125°C.

Device Information(1)

PART NUMBER	PACKAGE	BODY SIZE (NOM)
OPA990	SOT-23 (5)	2.90 mm × 1.60 mm
	SOT-23 (6)	2.90 mm × 1.60 mm
	SC70 (5)	2.00 mm × 1.25 mm
	SOT-553 (5)(2)	1.60 mm × 1.20 mm
OPA2990	SOIC (8)	4.90 mm × 3.90 mm
	SOT-23 (8)(2)	2.90 mm × 1.60 mm
	TSSOP (8)	3.00 mm × 4.40 mm
	VSSOP (8)(2)	3.00 mm × 3.00 mm
	WSON (8)	2.00 mm × 2.00 mm
	X2QFN (10)(2)	2.00 mm × 1.50 mm
OPA4990	SOIC (14)	8.65 mm × 3.90 mm
	TSSOP (14)	5.00 mm × 4.40 mm
	WQFN (16)(2)	3.00 mm × 3.00 mm
	X2QFN (14)(2)	2.00 mm × 2.00 mm

(1) For all available packages, see the orderable addendum at the end of the data sheet.

(2) This package is preview only.

OPAx990 in a High-Voltage, Multiplexed, Data-Acquisition System

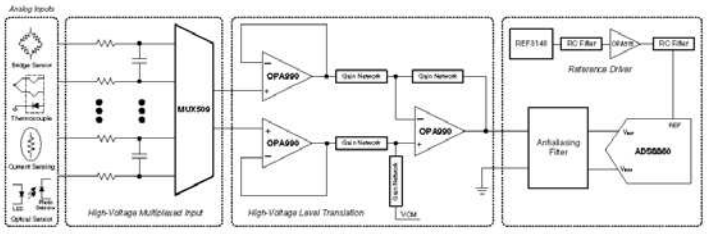

An IMPORTANT NOTICE at the end of this data sheet addresses availability, warranty, changes, use in safety-critical applications, intellectual property matters and other important disclaimers. PRODUCTION DATA.